Mini Vortex Mixers



Choose the Perfect Vortex Mixer From Four Durable Models for Everyday Mixing

Four OHAUS Mini Vortex Mixer models for gentle to high-speed reliable mixing. Non-digital model offers variable speed control, and digital model allows input of the exact speed and time to achieve repeatable results every time. Pulsing model features a unique pulse action that reduces heat generation, while providing more effective mixing and cell disruption. Fixed speed model offers simple one-touch, high-speed mixing for repeat applications.

Standard Features:

- Touch mode operation activates mixing when depressing the cup head or continuous mode for use with accessory attachments. Sturdy, rugged design ensures the unit stays in place while in use.
- Robust digital and non-digital Vortex Mixers offer effective speed control from low RPM start-up for gentle shaking to high-speed mixing for vigorous vortexing of samples.
- The Fixed Speed Vortex Mixer is an economical choice for vigorous mixing of samples at high speed. To ease repetitive sample processing, this unit provides simple, effective full-speed mixing.

Mini Vortex Mixers

Model	VXMNFS	VXMNAL	VXMNDG	VXMNPS
Control	Fixed Speed	Analog	Digital	Pulsing, digital
Speed Range	2500 rpm	300 rpm – 2500 rpm	500 rpm – 2500 rpm	
Orbit	4.9 mm			2.5 mm
Duty Rating	Intermittent			
Working Environment	39 °F – 104 °F, 20% – 85% relative humidity, non-condensing			
Power	230V, 0.6A, 50/60Hz			
Power Consumption	135 W			
Dimensions (W × L × H)	123 × 210 × 165 mm			
Net Weight	4.4 kg			

Other Standard Features and Equipment

Detachable 3-wire cord and plug, cup head and 7.6 cm accessory platform for beakers, flasks, test tubes etc. (included with all models), stainless steel microtube holder for 12 tubes (included with pulsing model only).

Compliance

- **Product Safety:** EN 61010-1, EN 61010-2-051
- **Electromagnetic Compatibility:** EN 61326-1 Class A, Industrial Environments
- **Compliance Marks:** CE; RCM; TÜV SÜD

Accessories

Item No.	Description	VXMNFS	VXMNAL	VXMNDG	VXMNPS
30400235	Cup Head	•	•	•	•
30400236	7.6 cm Head	•	•	•	•
30400237	7.6 cm Rubber Head Cover	•	•	•	•
30400196	8 cm Head with Rubber Cover	•	•	•	•
30400197	Tube Holder Kit with Retainer	N/A	•	•	•
30400198	Micro Tube and Well Plate Holder Kit	N/A	•	•	•
30400199	Micro Well Plate Kit with Retainer	N/A	•	•	•
30400200	Microtube Kit with Retainer	N/A	•	•	•
30400201	Foam Insert Variety Pack	N/A	•	•	•
30400202	Single Tube Holder	N/A	•	•	•
30400203	Single Tube Holder Adapter Vortex Genie	N/A	•	•	•
30400204	0.5 mL Micro-Tube Holder	N/A	•	•	•
30400205	1.5-2.0 mL Micro-Tube Holder	N/A	•	•	•
30400206	1.5-2.0 mL Stainless Steel Tube Holder	N/A	•	•	•
30400207	Ampule Tube Holder - Small (15-17 mm)	N/A	•	•	•
30400208	Ampule Tube Holder - Large (10-17 mm)	N/A	•	•	•
30400227	Insert Retainer	N/A	•	•	•
30400228	Vessel Harness, Pack of 2	N/A	•	•	•
30400229	Holder For 9-13 mm Tubes, Pack of 2	N/A	•	•	•
30400230	Holder For 14-19 mm Tubes, Pack of 2	N/A	•	•	•
30400231	Holder For 20-25 mm Tubes, Pack of 2	N/A	•	•	•
30400232	Micro-Tube Holder, Pack of 2	N/A	•	•	•
30400233	Micro-Well Plate Holder, Pack of 2	N/A	•	•	•
30400234	Flat Foam Insert, Pack of 2	N/A	•	•	•

Dimensions

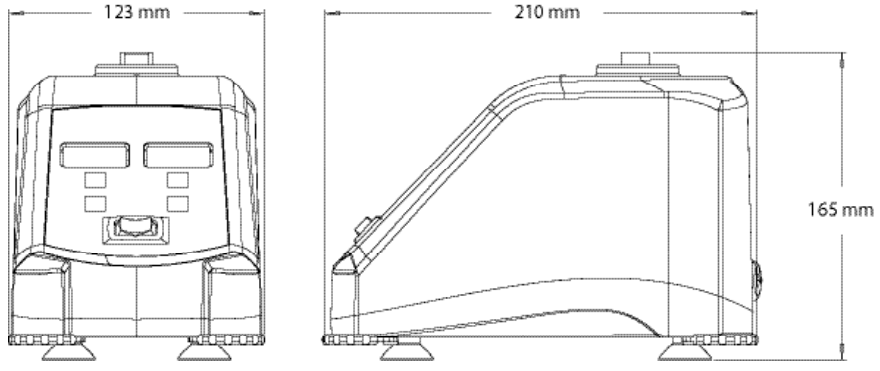

80775133_B 20190505 © Copyright OHAUS Corporation

OHAUS Asia/Pacific Headquarters

7F, Block 33, 680 Guiping Road
Shanghai 200233
China

e-mail: APmarketing@ohaus.com
Tel: +86 21 64855408

www.ohaus.com

The management system governing the manufacture of this product is ISO 9001:2015 certified.

SAP Literature #